BRASSI

Lusso™ Traditional
Widespread Bathroom Faucet – 1.2 GPM

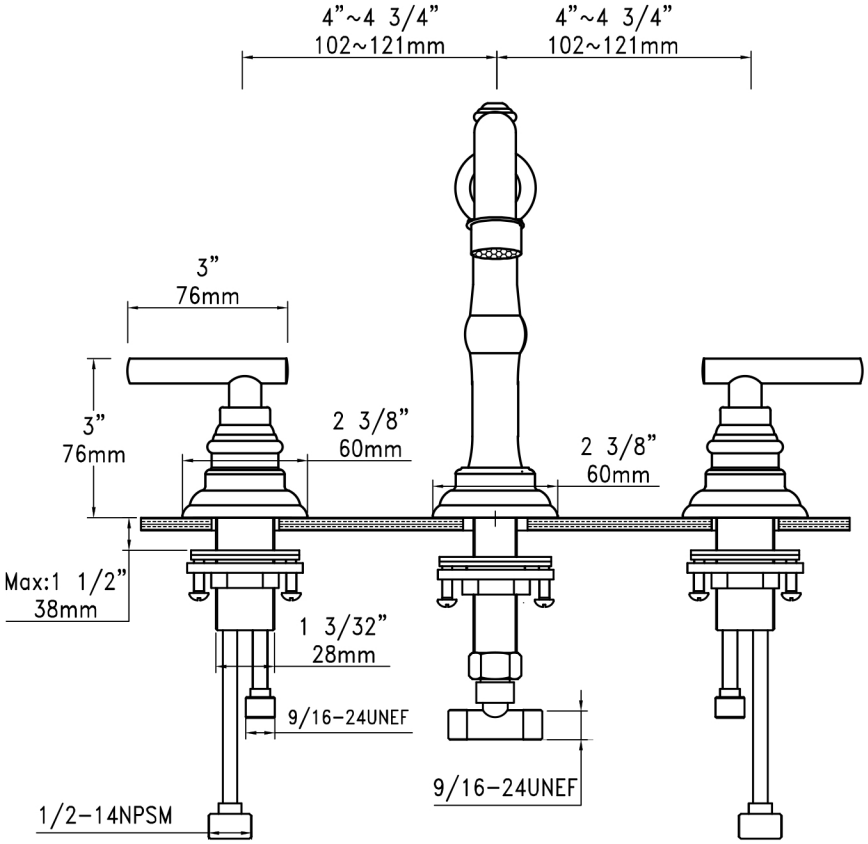

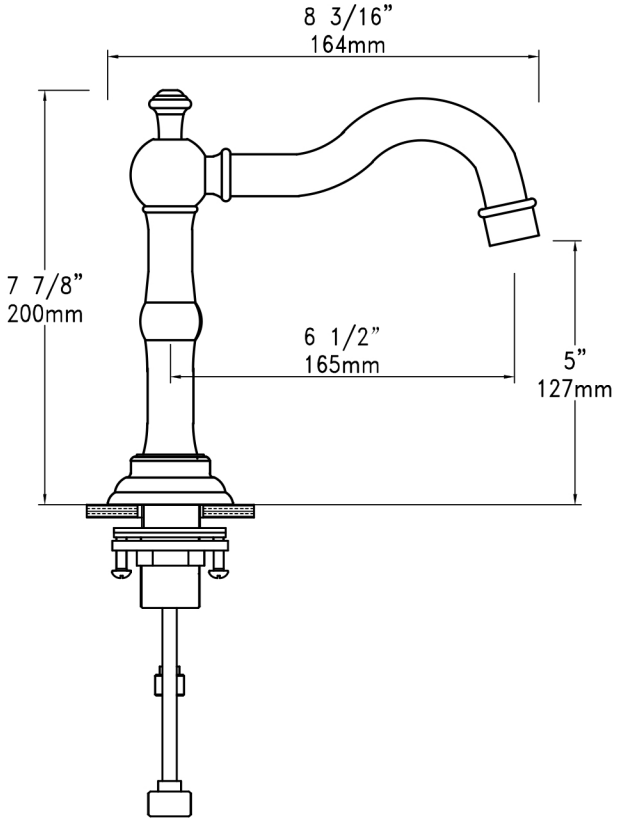

CZ441101